THE WORLD OF WEATHER DATA - THE WORLD OF WEATHER DATA - THE WORLD OF WEATHER DATA

Thies CLIMA

Instruction for Use

021416/11/04

Combined Wind Transmitter

4.3323.51.400

ADOLF THIES GmbH & Co. KG

Hauptstraße 76 37083 Göttingen Germany
Box 3536 + 3541 37025 Göttingen
Phone ++551 79001-0 Fax ++551 79001-65
www.thiesclima.com info@thiesclima.com

Contents

1 Models 2

2 Range of application 2

3 Mode of Operation 3

4 Recommendation Site Selection / Standard Installation 3

5 Installation 4
- 5.1 Mounting the Cup Anemometer 4
- 5.2 Mounting the Wind Vane 4
- 5.3 Mounting the Wind Transmitter 5
- 5.4 Electrical Mounting 5

6 Maintenance 5

7 Wiring diagram 5

8 Technical Data 6

9 Dimension 7

1 Models

Order-No..	Meas. range		Electr. Output
4.3323.51.400	Wind velocity Wind direction	: 0,3 .... 50 m/s : 170° - 0° - 170°	3 - 1042 Hz 0,23 / 5,00 / 9,77 V DC

2 Range of application

The combined wind transmitter is designed to detect the horizontal components of wind speed and wind direction. The measured values are available as digital signal (wind speed) and analogue signal (wind direction) on the output.

The instrument is equipped with an electronically-regulated heater for winter operation. It prevents the ball bearings and the external rotating parts from freezing**.**

Remark:

*A **Lightning Rod** Order-No. **4.3100.99.000** is recommended if the instrument is to be used in areas with considerable lightning activity.*

3 Mode of Operation

A light metal low-inertia cup anemometer running in ball bearings begins to rotate when the wind blows. The rotations are scanned opto-electronically, producing a pulse frequency which is used for digital data processing.

The light-metal wind vane which also runs in ball bearings is deflected by the wind. The measurement system consists of an optical potentiometer.The potentiometer value is transduced in a direction depending voltage signal.

The external parts of the instrument are made of corrosion-resistant materials and protected by a protective varnish. Labyrinth seals and o-rings protect the sensitive internal parts from precipitation. The instrument is designed for mounting to a mast tube; the electrical plug connection is situated in the transmitter shaft.

The Combined Wind Transmitter is shipped in parts to avoid damage during transport and to reduce the size of the container.

The shipment includes the following parts:

1 Comb. Wind Transmitter, pre-mounted

1 cup anemometer (black anodised)

1 wind vane (black anodised)

1 connecting plug

4 Recommendation Site Selection / Standard Installation

In general, wind measurement instruments should be able to detect wind conditions over a broad range. In order to obtain comparative values of the surface wind, measurements should be taken at a height of 10m above a flat, open terrain. Open terrain means that the distance between the wind transmitter and an obstacle is at least 10 times greater than the height of the obstacle itself. If this requirement cannot be fulfilled, then set the wind transmitter up at a height where the influence of local obstacles on the measured values is minimal (about 6-10 m above the level of the obstacle). If the wind transmitter is set up on a flat roof, then place it is the center of the roof and not at the edge in order to avoid privileged directions.

5 Installation

5.1 Mounting the Cup Anemometer

Unscrew the cap nut (SW 8) from the case of the speed transmitter and remove the disk. The rubber gasket remains in the protection cap. Place the cup anemometer such that the set pin on the cup anemometer catches in the notch of the protective cap. Replace the disk and rescrew the cap nut. Make sure you hold the transmitter on the protective cap and not on the cup anemometer.

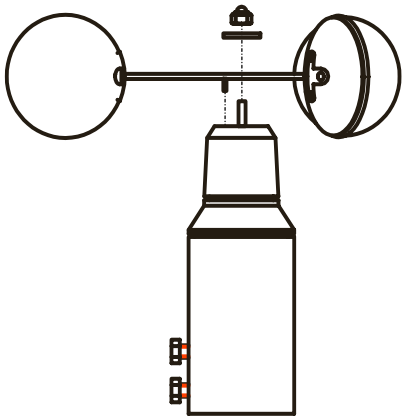

5.2 Mounting the Wind Vane

Mount the wind vane in the same way as the cup anemometer (see 5.1.) The only difference is that there is no disk.

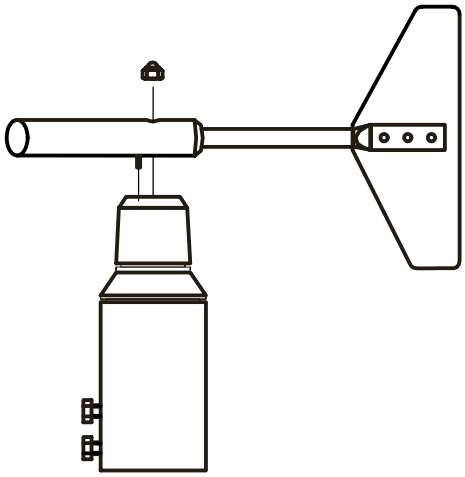

5.3 Mounting the Wind Transmitter

The wind transmitter can be mounted to a 50 mm long piece of pipe(R 1 1/2" (ϕ 48,3 mm). The internal diameter of the pipe must be at least 40 mm as the transmitter is connected from below with a plug. Solder a flexible control line LiYCY with the appropriate number of cores of 0.5 mm^2 each to the enclosed plug. Once the transmitter has been connected electrically, set it onto the pipe and align it with **the marking on the case to "south"**. **The bow of the case is aligned to "north".** Fix the instrument into position with the two hexagonal screws on the shaft.

5.4 Electrical Mounting

For electrical connection please refer to the connecting diagram.

6 Maintenance

If the instrument has been properly mounted, no maintenance is required. Heavy pollution can clog the slits between the rotating and stationary parts of the instrument. These slits must always be clean and unclogged.

After years of use, the ball bearings can suffer from wear and tear. This is expressed in a higher starting torque respectively in the fact that the cup anemometer does not start rotating. If such a defect occurs, we recommend that you return the instrument to the factory for repair.

7 Wiring diagram

Order – No.

4.3323.51.400

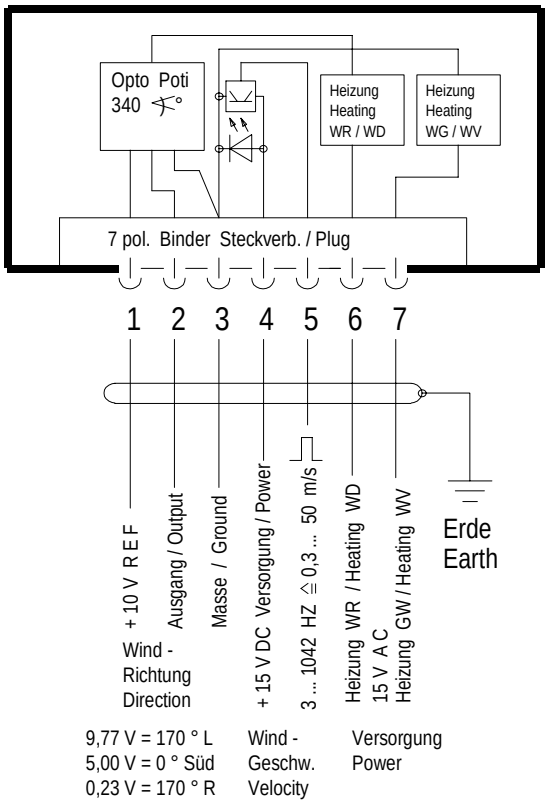

View on the soldered joint of the counter plug

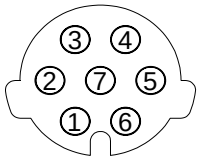

8 Technical Data

Wind speed **Order-No.**	**4.3323.51.400**
Measuring range	0,3...50 m/s
Electr. output	3 ... 1042 Hz, 15 V
Accuraccy (of mv.)	± 0,3 m/s bzw. ± 2 % of meas. value
Resolution	0,05 m wind run
Delay distance	< 5 m
Starting speed	0,3 m/s
Wind direction	
Measuring range	170° - 0° - 170° (0° = south)
Electr. output	**9,77 V DC (170° left)**
	5,00 V DC (0° = south)
	0,23 V DC (170° right)
Accuraccy (of mv.)	± 2 % Poti-Linearität
Starting speed	0,5 m/s at 90° vane deviation
Damping ratio	< 0,2
General	
Max. wind speed	80 m/s
Wind load at 35 m/s	ca. 50 N
Ambient temperature	-35...+80 °C
Operating voltage	15 V DC (Electronic)
	10 V DC Reference voltage
Heating	15 V AC, ca.40 W, electronically-regulated
Mounting	onto mast tube 1½“, for example DIN 2441
Connection	7 pol. plug
Weight	3 kg

9 Dimension

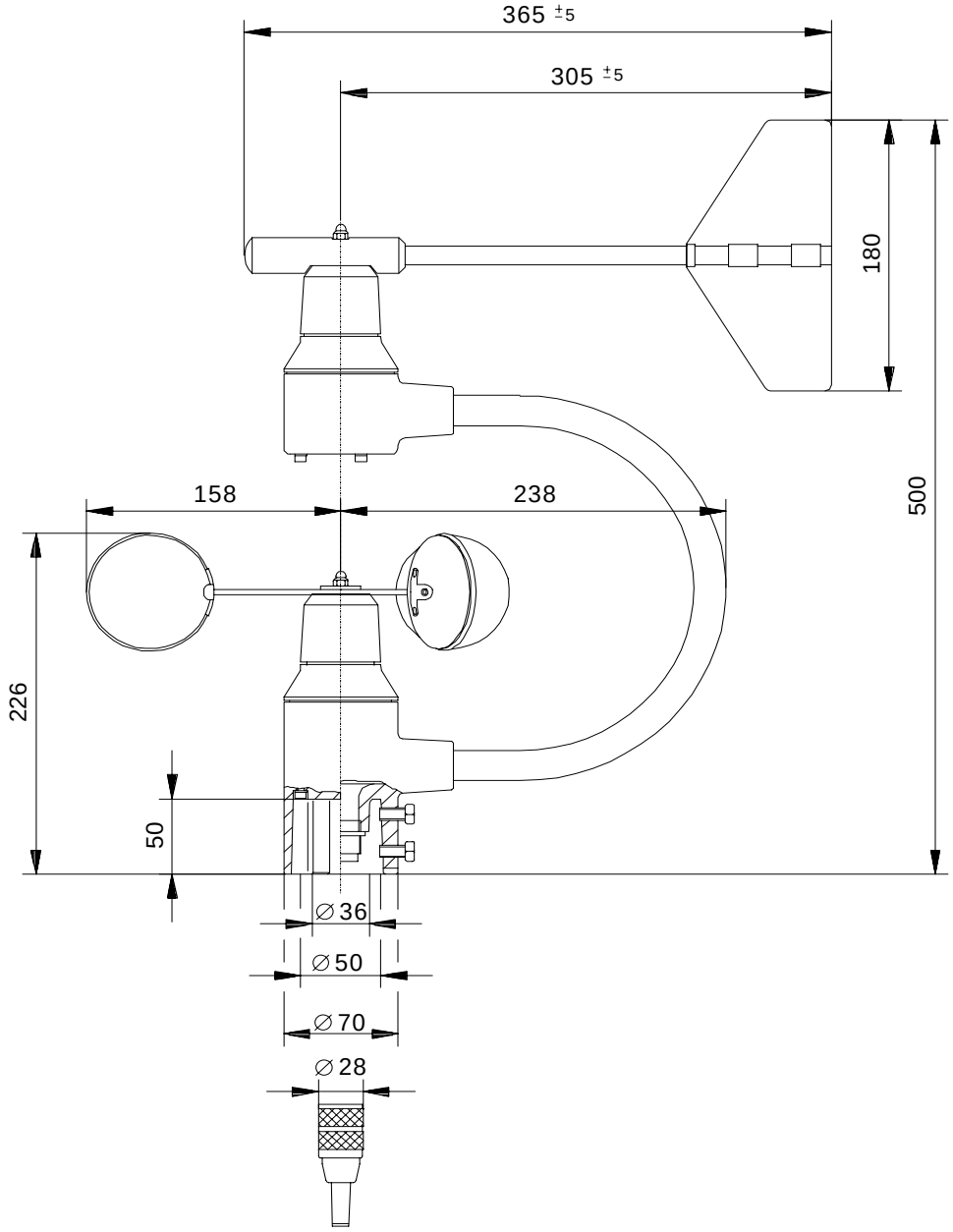

ADOLF THIES GmbH & Co. KG
Hauptstraße 76 37083 Göttingen Germany
P.O. Box 3536 + 3541 37025 Göttingen
Phone ++551 79001-0 Fax ++551 79001-65
www.thiesclima.com info@thiesclima.com

DIN EN ISO 9001 : 2000
08 100 971688
DIN EN ISO 14001 : 2005
08 104 971688

- Alterations reserved -